CE-8231EX1

# FUJITSU TEN SERVICE MANUAL

## CASSETTE RECEIVER

## Model D10 (CE-8231EX1)

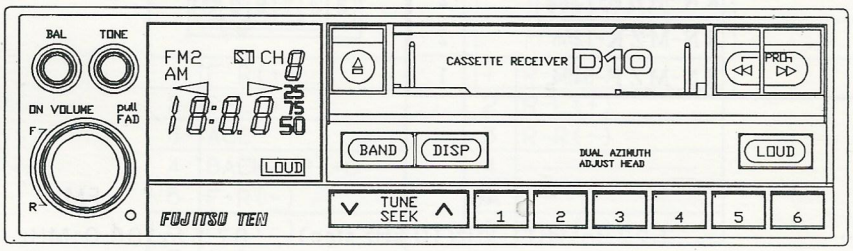


## TABLE OF CONTENTS


| | PAGE |
|---|---|
| COMPOSITIONS · PACKING VIEW · SPECIFICATIONS | 2, 3 |
| CONNECTIONS · PLAYBACK HEAD ADJUSTMENT | 3 |
| EXPLODED VIEW | 4 |
| SCHEMATIC | 5, 6 |
| WIRING ON PC BOARD | 7, 8 |
| EXPLODED VIEW (MDK-78-03Z/S) | 9 |
| IC EQUIVALENT CIRCUIT · LCD SEGMENT | 10–12 |
| ALIGNMENT | 13–15 |
| REPLACEMENT PARTS LIST | 16–20 |


FUJITSU TEN

## COMPOSITIONS

| Packing No. | Description | Stock No. | Q'ty |
|---|---|---|---|
| ① | Cassette receiver unit | CE-8231 | 1 |
| ② | Lead assembly | RN-EWJ-5384 | 1 |
| | Lead assembly | RN-EWJ-5030 | 1 |
| | Spacer | RN-MSE-1812 | 1 |
| | Spring | RN-MSC-1473 | 2 |
| ③ | Screw | F6-SSA-5×8S | 4 |
| | Screw | RN-MTN-A6×16 | 2 |
| | Special screw | RN-MET-144 | 2 |
| | Special screw | RN-MET-1419 | 1 |
| | Bolt | RN-MBW-D4×10S | 1 |
| | Nut | RN-MNR-06S | 2 |
| | Washer | F6-WM-4S | 1 |
| ④ | Bracket | RN-MBE-1903 | 2 |
| ⑤ | Escutcheon | RN-MDP-1920A | 1 |
| ⑥ | Bracket | RN-MBE-1904 | 1 |
| ⑦ | Bracket | RN-MBF-1040 | 1 |
| ⑧ | Owner's manual | RN-MXK-1074 | 1 |
| ⑨ | Polyform | RN-MZB-1540 | 2 |
| ⑩ | Pad | RN-MZK-1258 | 2 |
| ⑪ | Package | RN-MZF-5494 | 1 |

## PACKING VIEW

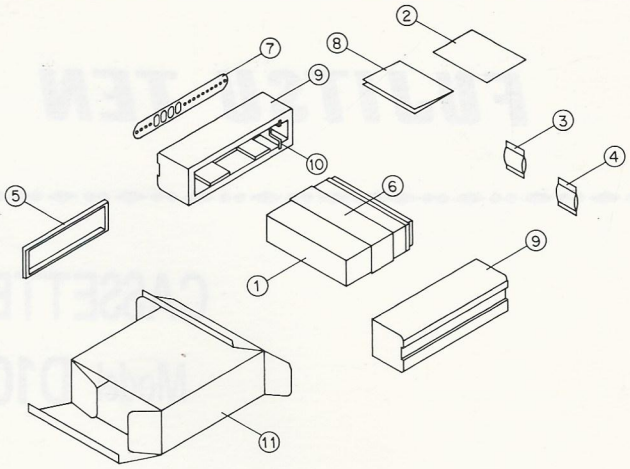


Fig. 1

## SPECIFICATIONS

| (RADIO SECTION) | AM | FM |
|---|---|---|
| TUNING RANGE | 522 to 1611 kHz(10 kHz step) | 87.5 to 108.0 MHz |
| INTERMEDIATE FREQUENCY | 450 kHz | 10.7 MHz |
| SENSITIVITY | 32 dBμ or better | |
| SENSITIVITY AT ELECTRONIC TUNING | Distant: 32±4 dBμ | Distant: 24±4 dBμ |
| LIMITING SENSITIVITY | | 5±5 dBμ |
| SIGNAL TO NOISE RATIO | 21 dB or better (35 dBμ input) | 50 dB or better (54 dBμ input)<br>Stereo: 40 dB or better (54 dBμ input) |
| SEPARATION | 10 dB or better | 20 dB or better (54 dBμ input) |
| ELECTRICAL FIDELITY | 100 Hz: 0±3 dB<br>4 kHz: −14±5 dB | 100 Hz: 0±3 dB<br>10 kHz: −11±5 dB |

(CASSETTE DECK SECTION)

NUMBER OF TRACKS ..... 4-track 2-channel
TAPE CARTRIDGE ..... Stereo/Monaural compact cassette
TAPE SPEED ..... 4.76cm/sec. (1-7/8", i.p.s.)
WOW & FLUTTER ..... 0.3% or better (RMS)
CROSSTALK ..... 42 dB or better
SEPARATION ..... 25 dB or better
SIGNAL TO NOISE RATIO ..... 42 dB or better (with MTT-112BN test tape)
TAKE-UP TORQUE ..... 35 to 75 g-cm

(COMMON SECTION)

LOAD IMPEDANCE ..... 4 ohms per channel
POWER INPUT ..... 12-volt car battery, negative terminal to ground
Voltage ..... 13.2 VDC
Current ..... Approx. 1.4 amperes (1W×4)
Approx. 3 ampere (Max.)

SEMICONDUCTORS ..... 10 ICs, 33 Transistors, 31 Diodes , 2 FETs
DIMENSIONS ..... 178(W)×50(H)×155(D)mm
WEIGHT ..... Unit—1.6 kg

# CONNECTION

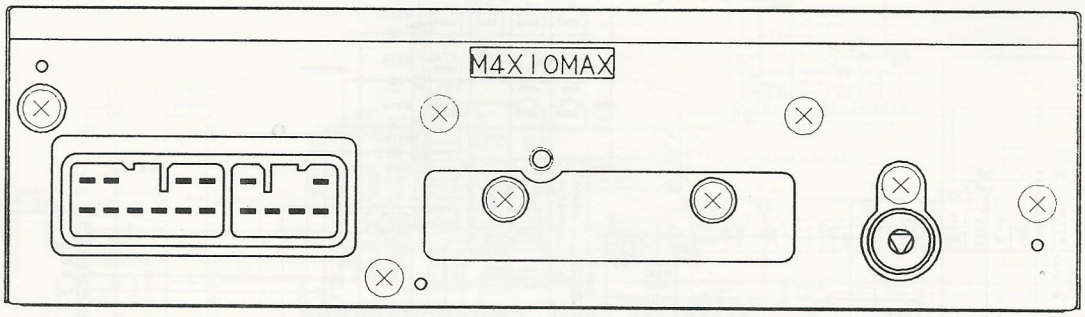


| 10P CONNECTOR | |
|---|---|
| 1 | F-R(+) |
| 2 | F-L(+) |
| 3 | ACC |
| 4 | BACK UP +B |
| 5 | F-R(-) |
| 6 | F-L(-) |
| 7 | GND |
| 8 | ANT +B |
| 9 | AMP+B |
| 10 | DIM |

| 6P CONNECTOR | |
|---|---|
| 1 | R-R(+) |
| 2 | R-L(+) |
| 3 | R-R(-) |
| 4 | ——— |
| 5 | ——— |
| 6 | R-L(-) |

Fig. 2

# PLAYBACK HEAD ADJUSTMENT (Azimuth)

Normally the playback head is precisely aligned at the factory and further adjustment should not be required unless the playback head or its mounting components are replaced. Beware of excessive adjustment. because improper adjustment results in inferior performance. If the azimuth is unnecessarily varied, the angle gets out of order, which cause lowering of tonal quality.

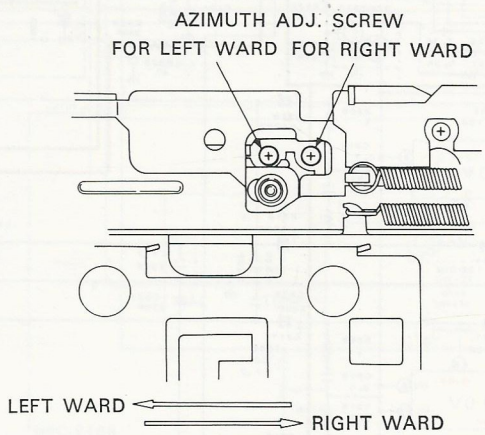


Fig. 3

Carefully adjust the azimuth adjust screw as shown in Fig. 3.

a. Power supply : 13.2 VDC

b. Test tape : MTT-114 (10 kHz, −10 dB Full track recording)

**Alignment Prodedure**

Check the direction of tapemotion and adjust the checked direction head azimuth to obtain as maximum output sound as possible. (Adjust both directions.)

After adjustment apply glue to azimuth adjustment screws to prevent loosening.

# EXPLODED VIEW

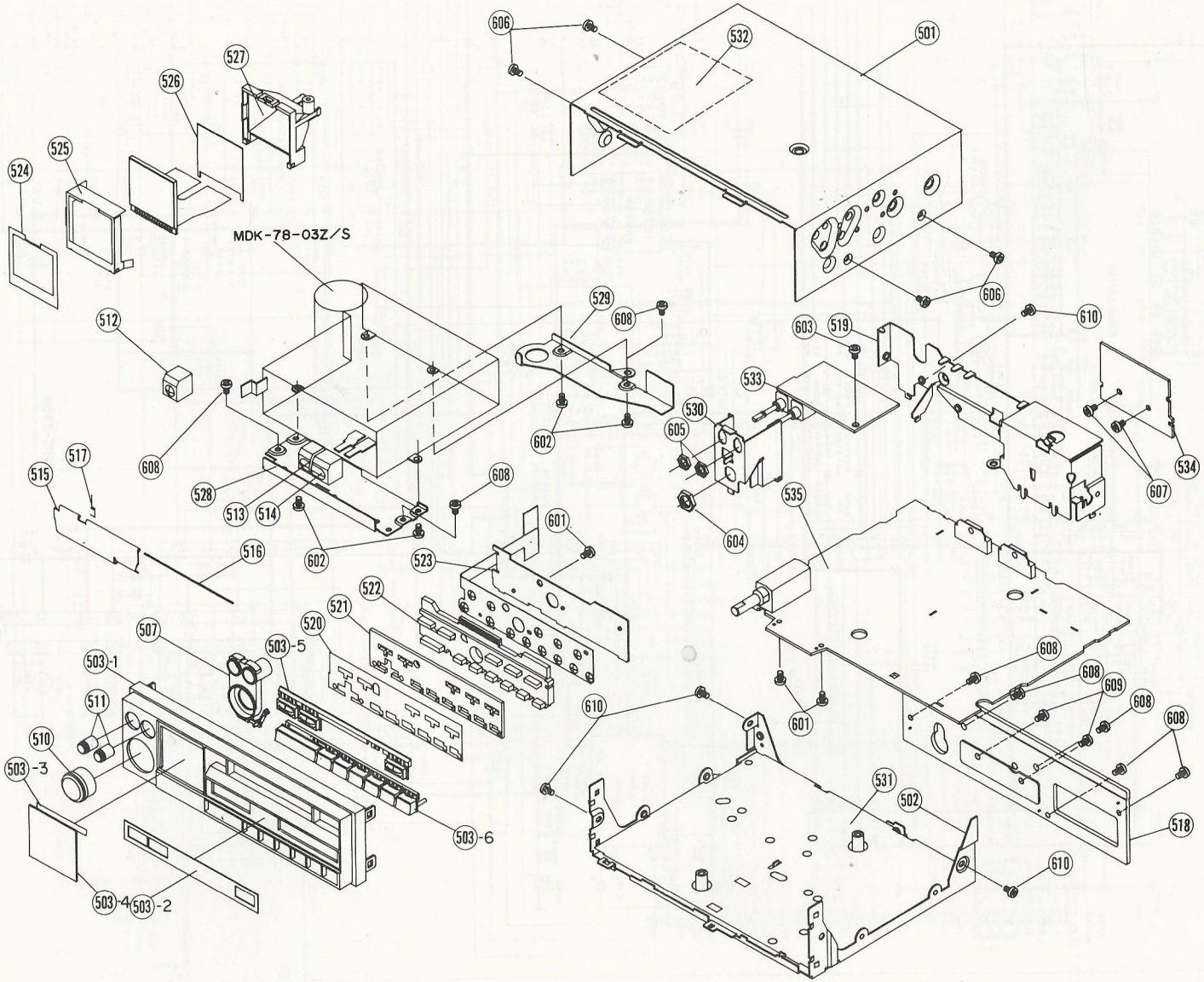


Fig. 4

# EXPLODED VIEW (MDK-78-03Z/S)



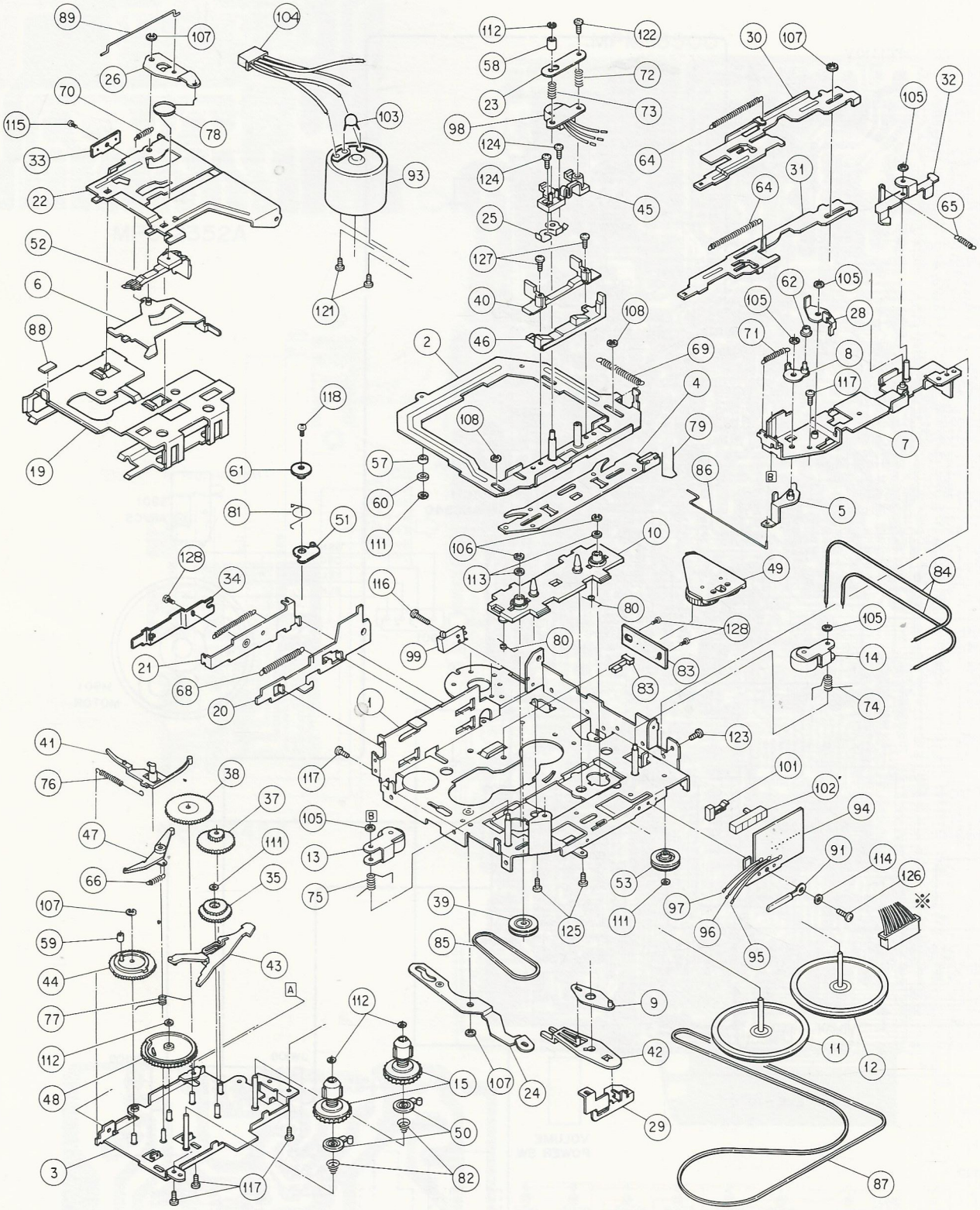


Fig. 7

NOTE : Cassette deck does not include ※-mark parts.

# IC EQUIVALENT CIRCUIT

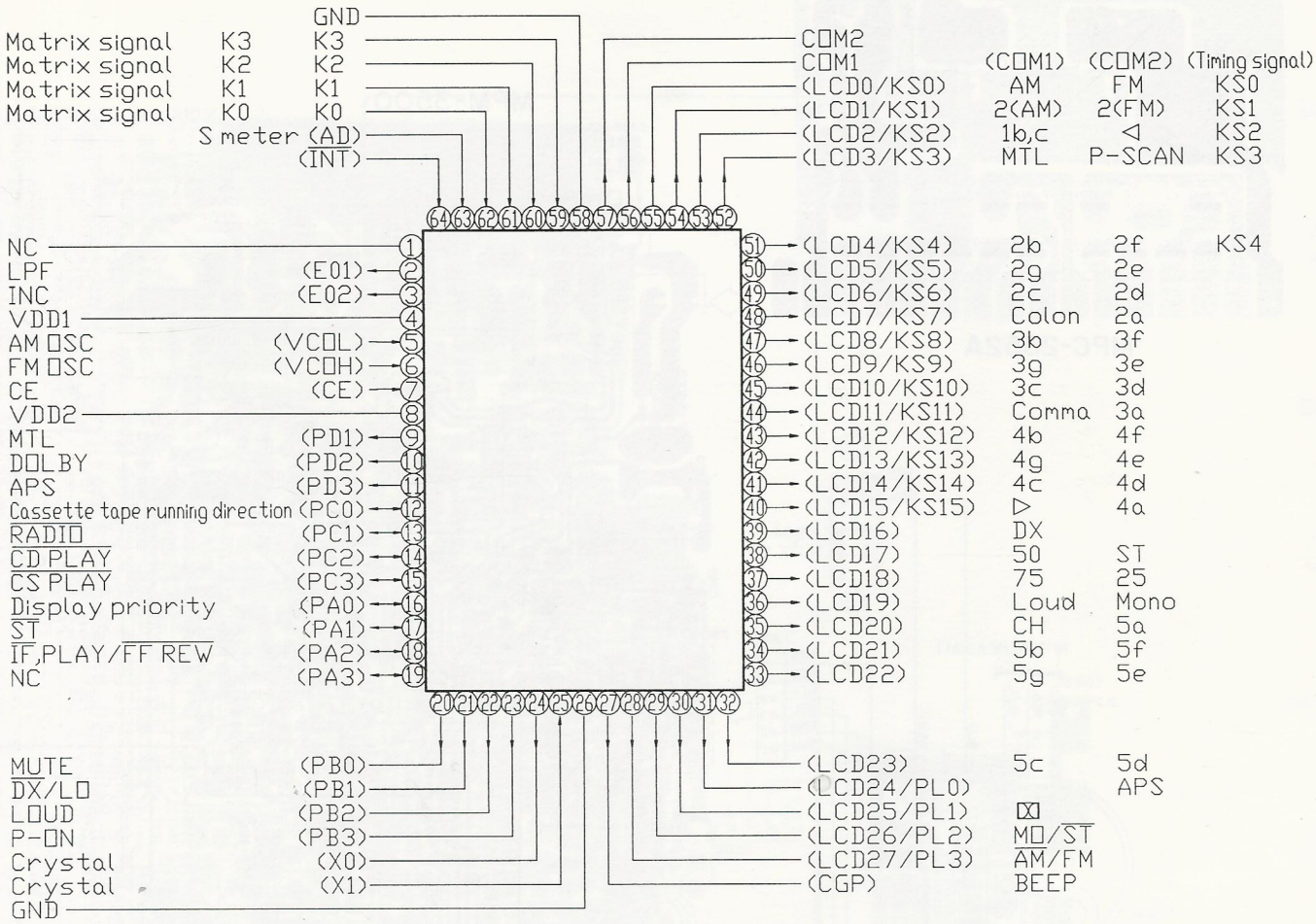


Fig. 8

| Terminal No. | I/O Terminal | Terminal Name | Input/ Output | Description | Logic L | Logic H | Initial Setting |
|---|---|---|---|---|---|---|---|
| 7 | CE | CE | Input | ACC SW status voltage | ACC OFF | ACC ON | |
| 9 | PD1 | MTL | Output | MTL signal | MTL OFF | MTL ON | L |
| 10 | PD2 | DOLBY | Output | Dolby control signal | OFF | ON | L |
| 11 | PD3 | APS | Output | APS control signal | OFF | ON | L |
| 12 | PC0 | Cassette tape running direction | Input | Cassette tape running direction signal input | FORWARD | REVERSE | – |
| 13 | PC1 | $\overline{\text{POWER SW}}$ | Input | Radio power ON-OFF SW | ON | OFF | – |
| 14 | PC2 | $\overline{\text{CD PLAY}}$ | Input | CD loading status input | CD ON | CD OFF | – |
| 15 | PC3 | $\overline{\text{CS PLAY}}$ | Input | Cassette tape loading status input | CS ON | CS OFF | – |
| 16 | PA0 | Priority display switching | Input | Priority display selector SW | Clock display priority | Frequency display priority | – |
| 17 | PA1 | $\overline{\text{ST}}$ | Input | Stereo signal input | STEREO | MONO | – |
| 18 | PA2 | $\overline{\text{IF}}$. PLAY/ $\overline{\text{FF, REW}}$ | Input | Cassette tape PLAY-FF REW status input | Detection present FF, REW | No detection PLAY | – |
| 20 | PB0 | MUTE | Output | MUTE signal | Invalid | Valid | L |
| 21 | PB1 | LO/$\overline{\text{DX}}$ | Output | Receiving sensitivity switching signal | DX | LOCAL | H |
| 22 | PB2 | $\overline{\text{LOUD}}$ | Output | LOUD control signal | LOUD ON | LOUD OFF | H |
| 23 | PB3 | P-ON | Output | Power control signal | OFF | ON | |
| 27 | CGP | BEEP | Output | Key fetch sound control | Not sounding | Sounding | L |
| 28 | PL3 | $\overline{\text{AM}}$/FM | Output | AM-FM control signal | AM ON | FM ON | H |
| 29 | PL2 | MO/$\overline{\text{ST}}$ | Output | MO-ST control signal | STEREO | MONO | L |
| 51~55 | KS0~4 | KS 0~4 | Output | Timing signal output | Invalid | Valid | L |
| 59~62 | K0~3 | K 0~3 | Input | Matrix input | SW OFF | SW ON | |
| 63 | AD | Signal meter | Input | Field strength input | | | |

◦ FM IF amp. Q. DET. (LA1143)

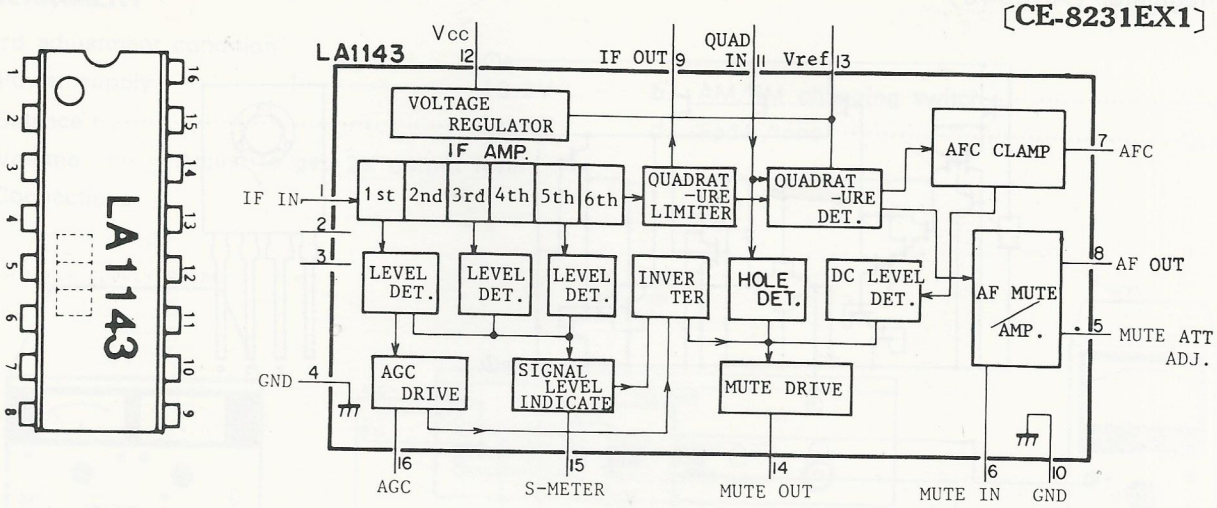


Fig. 9

◦ Equalizer amp. (LA3161)

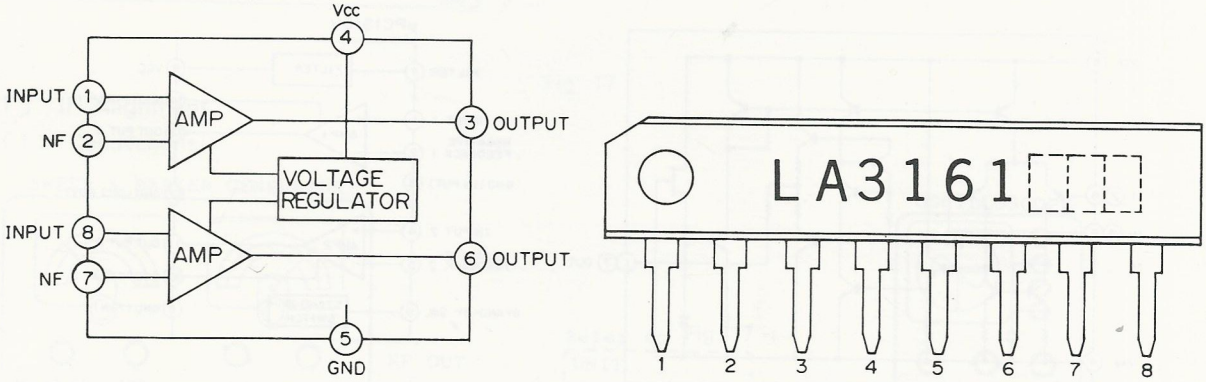


Fig. 10

◦ Regulator (S81250HG)

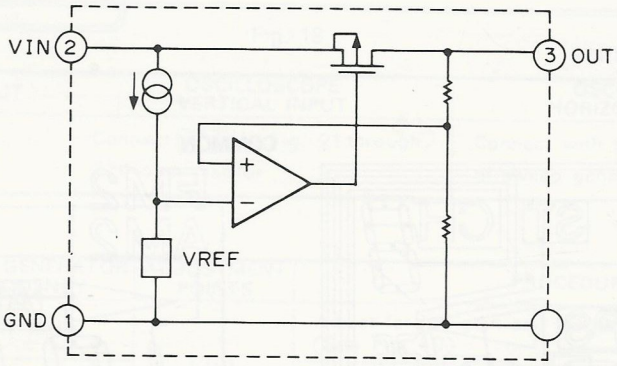


Fig. 11

◦ Ope. amp. (BA401)

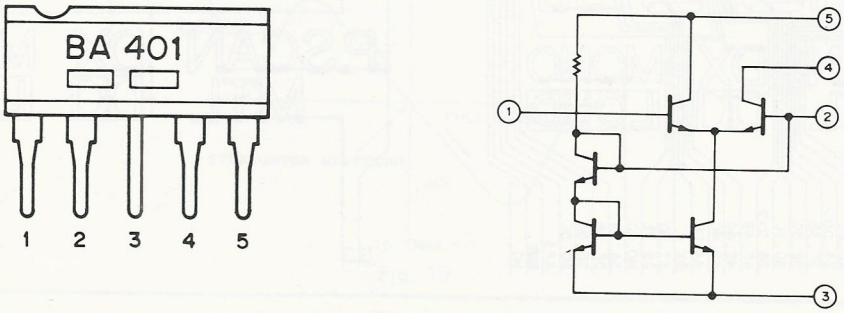


Fig. 12

◦ Regulator (AN6540)

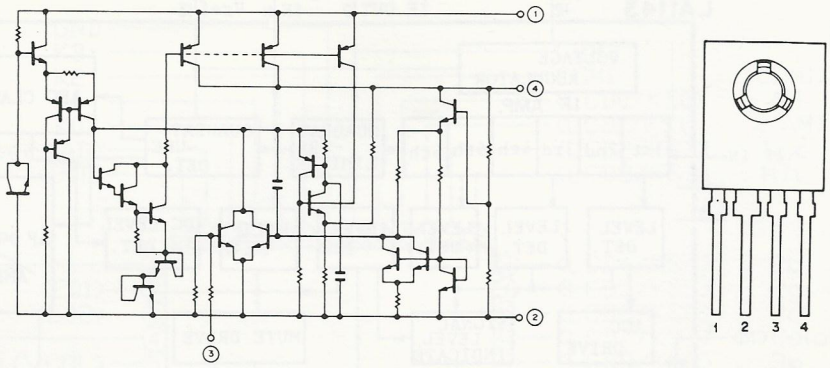


Fig. 13

◦ Ope. amp. (BA4558)

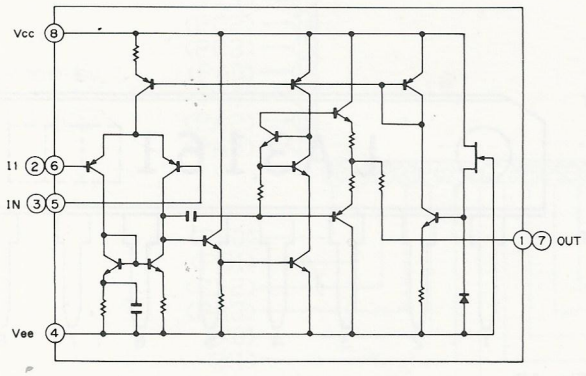


Fig. 14

◦ Power amp. (μPC1310V)

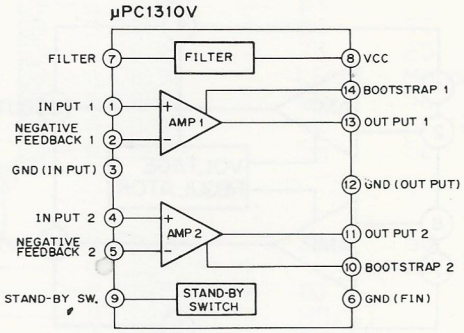


Fig. 15

# LCD SEGMENT

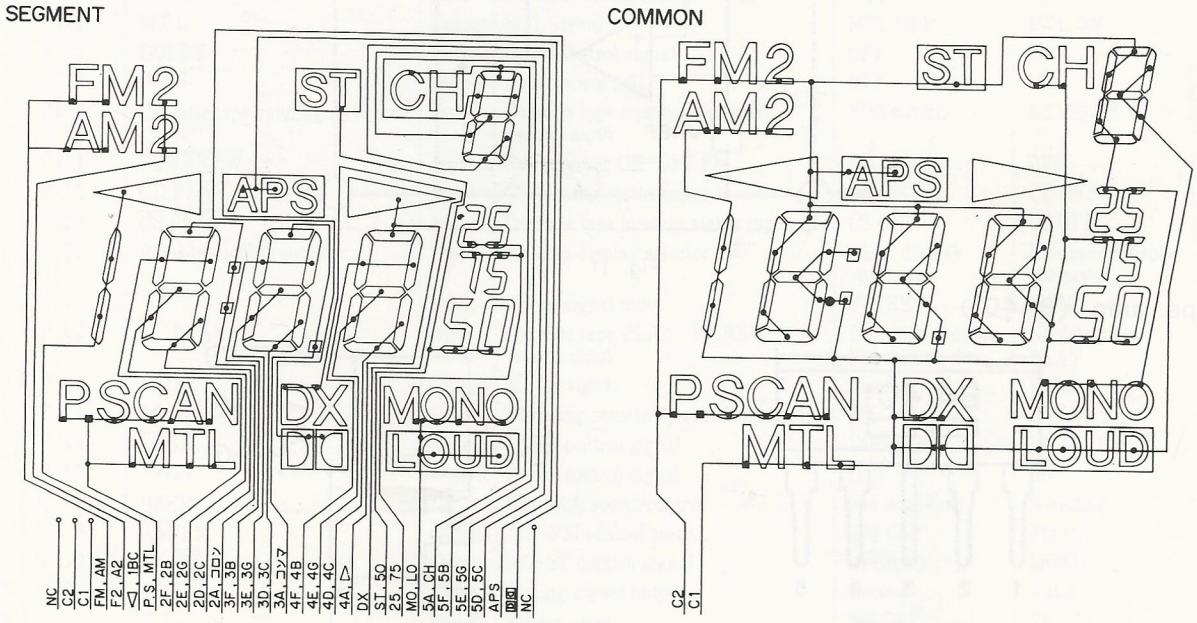


Fig. 16

# FM ALIGNMENT

Standard adjustment condition

a. Power supply ·····13.2V

b. AM/FM changing switch ·····FM

c. Balance ·····Center

d. Fader/tone ·····Center

e. Volume ····· Adjust to get 2V output level.

f. Connections

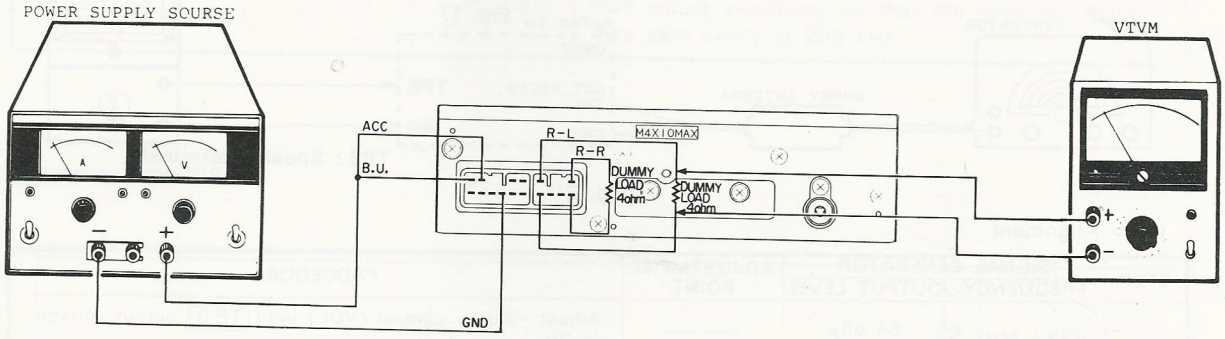


Fig. 17

〔1〕 IF Alignment

(1) Connections

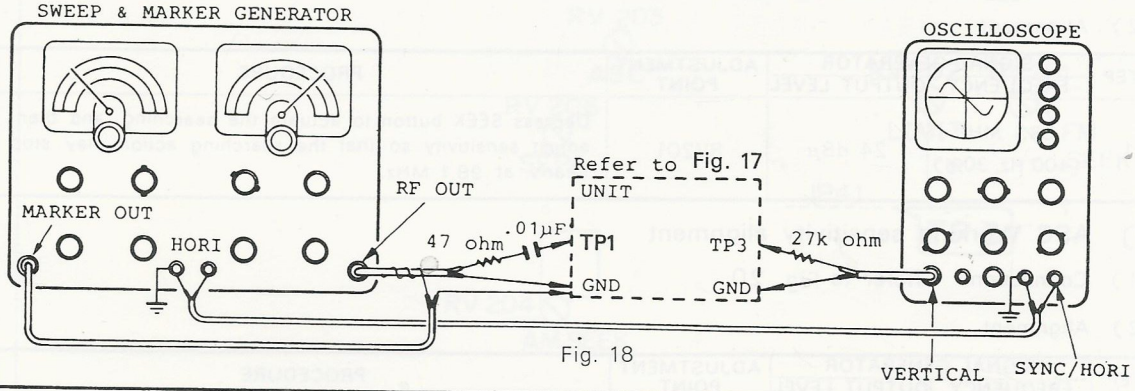


Fig. 18

| SWEEP GENERATOR OUTPUT | OSCILLOSCOPE VERTICAL INPUT | OSCILLOSCOPE HORIZONTAL INPUT |
|---|---|---|
| Antenna receptacle (J2) TP 1 | Connect TP 3 in Fig. 21 through 27K-ohm resistor | Connect with HORIZONTAL terminal of sweep generator |

(2) Alignment

| STEP | PURPOSE | SWEEP GENERATOR FREQUENCY | ADJUSTMENT POINTS | PROCEDURE |
|---|---|---|---|---|
| 1 | S curve | 10.7 MHz | T201 | Adjust for full gain and length of s-curve at linears. (See Fig. 19) |
| 2 | S curve (Center) | SG 10.7 MHz (400 Hz, 30%) | | Fine-adjust the potential difference between IC 202 ⑦ and ⑬ pins for 0V. |

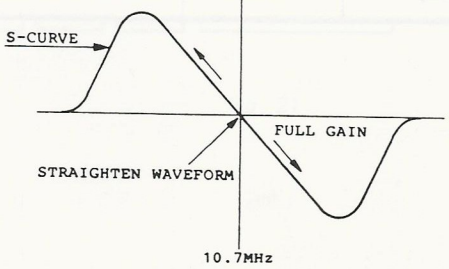


Fig. 19

NOTE: S curve center can be adjusted in the same manner by receiving local FM broadcast near 98.1 MHz.

## [2] Limiting sensitivity alignment

(1) Connections

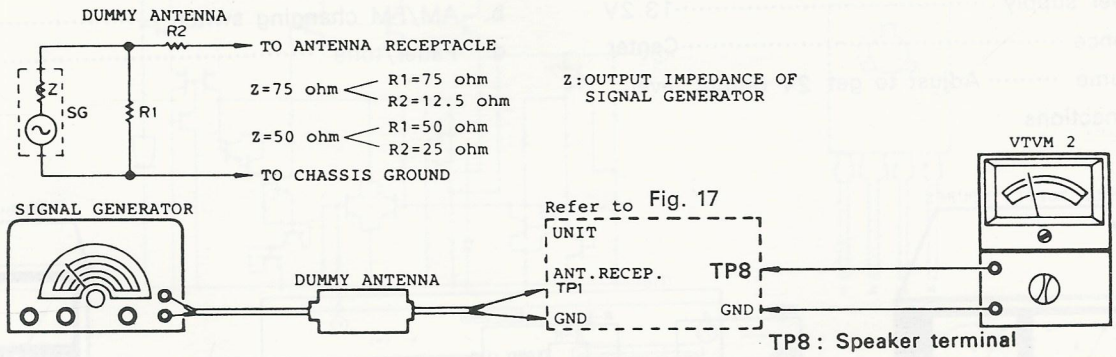


Fig. 20

(2) Alignment

| STEP | SIGNAL GENERATOR FREQUENCY | SIGNAL GENERATOR OUTPUT LEVEL | ADJUSTMENT POINT | PROCEDURE |
|---|---|---|---|---|
| 1 | 98.1 MHz (400Hz, 30%) | 54 dBμ | ——— | Adjust volume control (VOL) until TP 8 output voltage is 2V. |
| 2 | | 5 dBμ | RV202 | Adjust output voltage for −3 dB (1.4V). |

## [3] SEEK Alignment

(1) Connections Refer to Fig. 20

(2) Alignment

| STEP | SIGNAL GENERATOR FREQUENCY | SIGNAL GENERATOR OUTPUT LEVEL | ADJUSTMENT POINT | PROCEDURE |
|---|---|---|---|---|
| 1 | 98.1 MHz (400 Hz, 30%) | 24 dBμ | RV201 | Depress SEEK button to actuate the searching, and then adjust sensitivity so that the searching action may stop nearly at 98.1 MHz. |

## [4] ASC Working sensitivity alignment

(1) Connections Refer to Fig. 20

(2) Alignment

| STEP | SIGNAL GENERATOR FREQUENCY | SIGNAL GENERATOR OUTPUT LEVEL | ADJUSTMENT POINT | PROCEDURE |
|---|---|---|---|---|
| 1 | 98.1 MHz (1 kHz, 30%) | 54 dBμ | ——— | Adjust volume control (VOL) until TP 8 output voltage is 2V. |
| 2 | | 41 dBμ | RV203 | Adjust the separation for 10 dB |

## [5] Separation alignment

(1) Connections a. Stereo signal generator·····Connect the TP 1

b. Oscilloscope ·····Connect the TP 8 (L-ch)

(2) Alignment

| STEP | STEREO SIGNAL GENERATOR FREQUENCY | STEREO SIGNAL GENERATOR OUTPUT LEVEL | ADJUSTMENT POINT | PROCEDURE |
|---|---|---|---|---|
| 1 | 98.1 MHz (R-ch : 1 kHz, 30% L-ch : no modulation) | 54 dBμ | RV206 | Adjust L-ch output level for minimum. |

# AM ALIGNMENT

〔1〕 SEEK Alignment

(1) Connections Refer to Fig. 20

(2) Alignment

| STEP | SIGNAL GENERATOR FREQUENCY | SIGNAL GENERATOR OUTPUT LEVEL | ADJUSTMENT POINT | PROCEDURE |
|---|---|---|---|---|
| 1 | 999 kHz (400 Hz, 30%) | 32 dBμ | RV204 | Depress SEEK button to be actuate the seaching, and then adjust sensitivity so that the seaching action may stop nearly at 999 kHz. |

○ Adjustment points

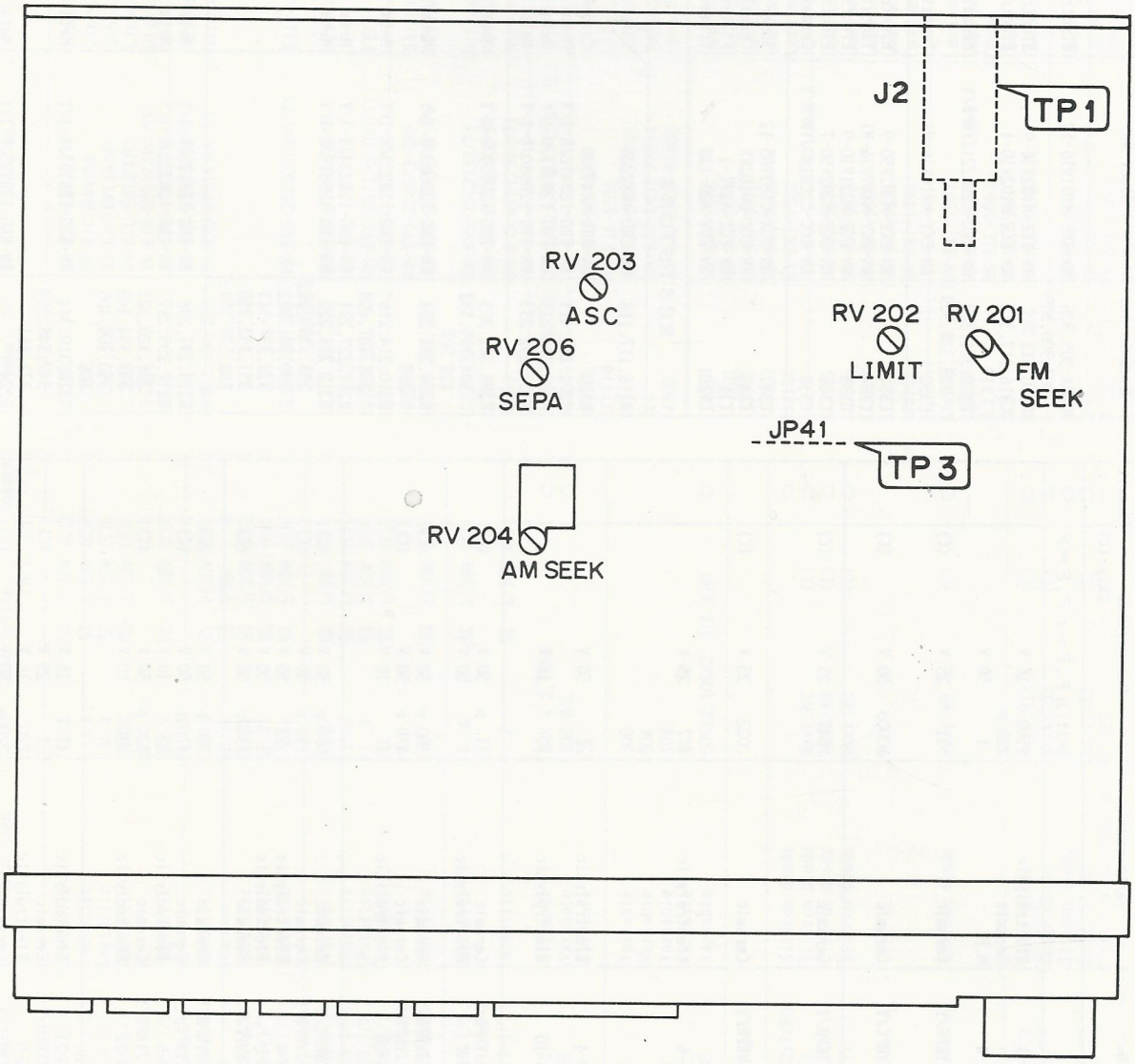


Fig. 21

# REPLACEMENT PARTS LIST

Note:Main replacement parts are marked O in the remarks column.

| Symbol. No. | Stock No. | Parts name | Description Chip:(C) | Remark |
|---|---|---|---|---|
| CAPACITORS | | | Unit:μF,P=pF,F=F | |
| C1 | RN-ECE-M152V16-1 | Electrolytic | 1500 16 V | |
| C2 | RN-ECK-DB221KY | Ceramic | 220 p | |
| C104,105 312 313,314,315 | RN-ECH-R104V50-4 | M.P. | .1 50 V | |
| C201,205,234 283,284,332 342,355 | RN-ECK-C2B103KYEPB/Y | Ceramic | .01 25 V (C) | |
| C202,203,296 297,298,299 | RN-ECK-C2B102KYHPC/Y | Ceramic | 1000p 50 V (C) | |
| C204,206,209 210,211,213 230,231,340 343,351 | RN-ECK-C2F473ZYEPB/Y | Ceramic | .047 25 V (C) | |
| C207,208,212 216,236,237 238,256,257 | RN-ECK-C2B223KYEPB/Y | Ceramic | .022 25 V (C) | |
| C214,221,235 273,274,281 282,292,293 294,295,324 356 | RN-ECE-M4R7V25-6 | Electrolytic | 4.7 25 V | |
| C215,225,228 232,333 | RN-ECE-MR10V50-4 | Electrolytic | .1 50 V | |
| C217,247,289 290,334 | RN-ECE-M100V16-10 | Electrolytic | 10 16 V | |
| C218,339 | RN-ECC-C2CH330JYHPB/Y | Ceramic | 33 p 50 V (C) | |
| C219,252,253 337 | RN-ECE-M1R0V50-7 | Electrolytic | 1 50 V | |
| C220 | RN-ECC-C2SL151JYHPB/Y | Ceramic | 150 p 50 V (C) | |
| C222 | RN-ECC-C2SL471JYHPB/Y | Ceramic | 470 p 50 V (C) | |
| C223,260,261 291 | RN-ECE-M470V10-10 | Electrolytic | 47 10 V | |
| C224 | RN-ECK-C2B682KYHPC/Y | Ceramic | 6800p 50 V (C) | |
| C226 | RN-ECC-C2RH391JYHPB/Y | Ceramic | 390 p 50 V (C) | |
| C227 | RN-ECE-MR22V50-4 | Electrolytic | .22 50 V | |
| C229 | RN-ECE-M3R3V50-3 | Electrolytic | 3.3 50 V | |
| C233 | RN-ECK-C2B332KYHPC/Y | Ceramic | 3300p 50 V (C) | |
| C239 | RN-ECC-C2SL331JYHPB/Y | Ceramic | 330 p 50 V (C) | |
| C240 | RN-ECK-C2B472KYHPC/Y | Ceramic | 4700p 50 V (C) | |
| C241,275,276 | RN-ECE-M220V10-5 | Electrolytic | 22 10 V | |
| C250,251 | RN-ECC-C2SL821JYHPB/Y | Ceramic | 820 p 50 V (C) | |
| C254,255,300 301,302,303 | RN-ECE-M101V10-12 | Electrolytic | 100 10 V | |
| C269,270 | RN-ECE-M470V16-11 | Electrolytic | 47 16 V | |
| C271 | RN-ECK-C2F104ZYEPB/Y | Ceramic | .1 25 V (C) | |
| C272,346 | RN-ECE-M221V16-9 | Electrolytic | 220 16 V | |
| C285,286 | RN-ECK-C2B222KYHPC/Y | Ceramic | 2200p 50 V (C) | |
| C287,288 | RN-ECE-MR47V50-8 | Electrolytic | .47 50 V | |
| C304,305,306 307,308,309 | RN-ECE-M101V16-10 | Electrolytic | 100 16 V | |
| C310,311 | RN-ECE-M102V16-9 | Electrolytic | 1000 16 V | |
| C316,317,318 319 | RN-ECE-M102V10-4 | Electrolytic | 1000 10 V | |
| C320,321,322 323,328,329 | RN-ECC-C2SL221JYHPB/Y | Ceramic | 220 p 50 V (C) | |
| C330 | RN-ECY-MR10V16-M1 | Tantalum | .1 16 V | |
| C331 | RN-ECE-M2R2V50-9 | Electrolytic | 2.2 50 V | |
| C334 | RN-ECY-M4R7V16-M1 | Tantalum | 4.7 16 V | |
| C335 | RN-ECE-M221V10-9 | Electrolytic | 220 10 V | |
| C336 | RN-ECE-M2R2V50-7 | Electrolytic | 2.2 50 V | |
| C338 | RN-ECC-C2CH180JYHPB/Y | Ceramic | 18 p 50 V (C) | |
| C341 | RN-ECX-C183V05-12 | Super-capacitor | .018F 05 V | |
| C345 | RN-ECK-DB102KY | Ceramic | 1000p | |
| CI1 | RN-ECI-A271-1 | Filter | | |
| CV201 | RN-ECV-A20-128 | Trimmer | | |
| RESISTORS | | | Unit:ohm , K=kohm | |
| R116,117,118 119 | RN-ERD-AE822JB | Carbon | 8.2K 5% 1/4W | |
| R120 | RN-ERD-AE473JB | Carbon | 47 K 5% 1/4W | |
| R201,202,411 | RN-ERG-I2B472JR-1/Y | Metallic | 4.7K 5% 1/10W (C) | |
| R203,206,223 | RN-ERG-I2B331JR-1/Y | Metallic | 330 5% 1/10W (C) | |
| R207,252,253 | RN-ERG-I2B680JR-1/Y | Metallic | 68 5% 1/10W (C) | |
| R208,302,303 304,305,332 412 | RN-ERG-I2B101JR-1/Y | Metallic | 100 5% 1/10W (C) | |
| R209,228,254 255 | RN-ERG-I2B682JR-1/Y | Metallic | 6.8K 5% 1/10W (C) | |
| R210,214,216 238,407,408 | RN-ERG-I2B223JR-1/Y | Metallic | 22 K 5% 1/10W (C) | |
| R211,227,231 | RN-ERG-I2B224JR-1/Y | Metallic | 220K 5% 1/10W (C) | |
| R212,213,222 233,,289,292 299,301,322 323,337~343 351,352,358 380 | RN-ERG-I2B473JR-1/Y | Metallic | 47 K 5% 1/10W (C) | |
| R215,297,298 | RN-ERG-I2B122JR-1/Y | Metallic | 1.2K 5% 1/10W (C) | |
| R217,235,287 288,320,321 333,334,349 350,365,405 406 | RN-ERG-I2B222JR-1/Y | Metallic | 2.2K 5% 1/10W (C) | |
| R218,319,344 347,348,364 371,381 | RN-ERG-I2B103JR-1/Y | Metallic | 10 K 5% 1/10W (C) | |
| R224 | RN-ERG-I2B123JR-1/Y | Metallic | 12 K 5% 1/10W (C) | |
| R225,266,267 | RN-ERG-I2B332JR-1/Y | Metallic | 3.3K 5% 1/10W (C) | |
| R226 | RN-ERG-I2B152JR-1/Y | Metallic | 1.5K 5% 1/10W (C) | |

| Symbol. No. | Stock No. | Parts name | Description Chip:(C) | Remark |
|---|---|---|---|---|
| R232,236 | RN-ERG-I2B684JR-1/Y | Metallic | 680K 5% 1/10W (C) | |
| R234 | RN-ERG-I2B333JR-1/Y | Metallic | 33 K 5% 1/10W (C) | |
| R237,250,251 | RN-ERG-I2B563JR-1/Y | Metallic | 56 K 5% 1/10W (C) | |
| R238,401,402 403,404 | RN-ERG-I2B104JR-1/Y | Metallic | 100K 5% 1/10W (C) | |
| R239,240 | RN-ERG-I2B823JR-1/Y | Metallic | 82 K 5% 1/10W (C) | |
| R241,242 | RN-ERG-I2B393JR-1/Y | Metallic | 39 K 5% 1/10W (C) | |
| R251 | RN-ERD-AE272JB | Carbon | 2.7K 5% 1/4W | |
| R256,257 | RN-ERG-I2B124JR-1/Y | Metallic | 120K 5% 1/10W (C) | |
| R258,259 | RN-ERG-I2B272JR-1/Y | Metallic | 2.7K 5% 1/10W (C) | |
| R268,269 | RN-ERG-I2B562JR-1/Y | Metallic | 5.6K 5% 1/10W (C) | |
| R278 | RN-ERD-DF2R2J-3 | Carbon | 2.2 5% 1/2W | |
| R295,296 | RN-ERG-I2B154JR-1/Y | Metallic | 150K 5% 1/10W (C) | |
| R300,345,346 | RN-ERG-I2B102JR-1/Y | Metallic | 1 K 5% 1/10W (C) | |
| R306,307,308 309 | RN-ERG-I2B1ROJR-1/Y | Metallic | 1 5% 1/10W (C) | |
| R324,325 | RN-ERG-I2B470JR-1/Y | Metallic | 47 5% 1/10W (C) | |
| R330,331,335 336,357 | RN-ERG-I2B392JR-1/Y | Metallic | 3.9K 5% 1/10W (C) | |
| R366,367,368 369 | RN-ERG-I2B2R2JR-1/Y | Metallic | 2.2 5% 1/10W (C) | |
| RV102 | RN-ERV-1N2-1012 | Variable | 20K x 2,TONE | ○ |
| RV105 | RN-ERV-1N1-1005 | Variable | 20K,BAL | ○ |
| RV201,206 | RN-ERV-0N1-240 | Variable | 2K | |
| RV202 | RN-ERV-0N1-237 | Variable | 300 | |
| RV203 | RN-ERV-0N1-246 | Variable | 50K | |
| RV204 | RN-ERV-0N1-243 | Variable | 10K | |
| RV205 | RN-ERV-0N1-242 | Variable | 5K | |
| RV209(S215) | RN-ERV-1P4-1005 | Variable | 50Kx2,10Kx2 VOL,FAD | ○ |
| SEMICONDUCTORS | | | | |
| D1 | RN-EDS-1N5401U21B/FO | Silicon diode | | ○ |
| D202,223,233 | RN-EDS-MA153/TY | Silicon diode | Mark:MC (C) | ○ |
| D203 | RN-EDS-MA151WA/TY | Silicon diode | Mark:MN (C) | ○ |
| D204,205,208 212,213,214 215,216,224 229,230,401 402 | RN-EDS-MA151K/TY | Silicon diode | Mark:MH (C) | ○ |
| D206,207,210 217,218,219 226 | RN-EDS-MA151WK/TY | Silicon diode | Mark:MT (C) | ○ |
| D211 | RN-EDT-RD9R1MB3/TY | Zener diode | Mark:913 (C) | ○ |
| D225 | RN-EDT-RD7R5MB3/TY | Zener diode | Mark:753 (C) | ○ |
| D226,227 | RN-EDS-1A3 | Silicon diode | | ○ |
| D231,232 | RN-EDT-RD180MB3/TY | Zener diode | Mark:183 (C) | ○ |
| IC11 | RN-EIC-AN6540 | Linear-monolithic IC | V.REG. | ○ |
| IC201 | RN-EIC-BA401 | Linear-monolithic IC | Op.amp. | ○ |
| IC202 | RN-EIC-LA1143 | Linear-monolithic IC | FM IF ~ Q.DET. | ○ |
| IC203 | RN-EIC-AN7465S | Linear-monolithic IC | | ○ |

| Symbol. No. | Stock No. | Parts name | Description Chip:(C) | Remark |
|---|---|---|---|---|
| IC204 | RN-EIC-LA3161 | Linear-monolithic IC | EQ.amp. | ○ |
| IC206 | RN-EIC-BA4558 | Linear-monolithic IC | Op.amp. | ○ |
| IC207,208 | RN-EIC-UPC1310V | Linear-monolithic IC | Power amp. | ○ |
| IC210 | RN-EIC-S81250HG | Linear-monolithic IC | V.REG. | ○ |
| IC211 | RN-EIM-UPD1719G-555 | Digital-monolithic IC | Controller | ○ |
| Q101,102 | RN-EVS-DTC314TK/TY | Silicon transistor | Mark:H04 (C) | ○ |
| Q201,206,207 221,222,224 241,243,246 247,249 | RN-EVS-DTC144EK/TY | Silicon transistor | Mark:26 (C) | ○ |
| Q204,205,208 209,230,231 | RN-EVS-2SD601-QRS/TY | Silicon transistor | Mark:YQ,YR,YS (C) | ○ |
| Q213,229,239 242 | RN-EVS-DTA114EK/TY | Silicon transistor | Mark:14 (C) | ○ |
| Q220,223 | RN-EVF-2SJ106-YGB/TY | FET | Mark:VY,VG,VB (C) | ○ |
| Q225 | RN-EVS-2SD973-QRS | Silicon transistor | | ○ |
| Q226,232,233 235,250 | RN-EVS-2SB815-67/TY | Silicon transistor | Mark:B6,B7 (C) | ○ |
| Q227,236 | RN-EVS-2SC2532/TY | Silicon transistor | Mark:AN (C) | ○ |
| Q234 | RN-EVS-DTC124EK/TY | Silicon transistor | Mark:25 (C) | ○ |
| Q251 | RN-EVS-DTD123YK/TY | Silicon transistor | Mark:F62 (C) | ○ |
| MISCELLANEOUS ELECTRICAL | | | | |
| CF201 | RN-EFC-F2-114 | Ceramic filter | | |
| J2 | RN-EJA-1016 | Antenna receptacle | | |
| J3 | RN-EJU-1407-FAB15 | Connector | 15P | |
| J4 | RN-EJU-1407-FAB14 | Connector | 14P | |
| J300 | RN-EJU-1407-FAB08 | Connector | 8P | |
| J902 | RN-EWI-1506 | Lead assembly | With 6P | |
| JJ101 | RN-EWI-1278 | Lead assembly | | |
| JJ102 | RN-EWI-1276 | Lead assembly | | |
| JJ103 | RN-EWI-1501 | Lead assembly | | |
| JJ104 | RN-EWI-1502 | Lead assembly | | |
| JJ105 | RN-EWI-1274 | Lead assembly | | |
| JJ106 | RN-EWI-1273 | Lead assembly | | |
| JJ107 | RN-EWI-1500 | Lead assembly | | |
| JJ110 | RN-EWI-1281 | Lead assembly | | |
| JW107 | RN-EWI-1498 | Lead assembly | | |
| JW108 | RN-EWI-1504 | Lead assembly | | |
| JW109 | RN-EWI-1503 | Lead assembly | | |
| L1 | RN-ELL-1063 | Choke | .4mH | |
| L2 | RN-ELL-336 | Choke | 2.6mH | |
| L201,202,204 | RN-ELH-C6R8-KAL | Choke | 6.8uH | |
| L205 | RN-ELH-C102-6 | Choke | 1mH | |
| P1 | RN-EJU-S16V-1357 | Connector | 16P | |
| PL201 | RN-EPM-1400A | Lamp assembly | (GRN) | ○ |
| PL202,203 | RN-EPM-1493 | Lamp assembly | (GRN) | ○ |
| S201-S211 | RN-ESD-1042A | Push switch | | ○ |
| S217 | RN-ESB-1N1-1019 | Push switch | Reset switch | ○ |

| Symbol. No. | Stock No. | Parts name | Description Chip:(C) | Remark |
|---|---|---|---|---|
| T201 | RN-ETF-1023 | FM IF transformer | | |
| TV201 | RN-ETV-1105 | Front end | | ○ |
| VE101 | RN-EVE-1070 | Liquid crystal element | | ○ |
| VS201 | RN-EVV-C10DK220 | Varistor | | ○ |
| X201 | RN-EXD-1015 | Crystal | 4.5MHz | |

| Illus. No. | Stock No. | Parts name | Description | Q'ty | Remark |
|---|---|---|---|---|---|
| MECHANICAL | | | | | |
| 501 | RN-MAD-1480 | Chassis | Top | 1 | |
| 502 | RN-MAD-1447B | Chassis | Bottom | 1 | |
| 503-1 | RN-MDP-2178 | Escutcheon | | 1 | ○ |
| 503-2 | RN-MPL-1049 | Panel | | 1 | |
| 503-3 | RN-MSE-2175 | Spacer | | 1 | |
| 503-4 | RN-MPL-1051 | Panel | | 1 | |
| 503-5 | RN-MYB-2788 | Button | Ass'y | 1 | ○ |
| 503-6 | RN-MYB-2786 | Button | TUNE | 1 | ○ |
| 507 | RN-MLF-1335B | Filter | | 1 | |
| 510 | RN-MYC-1104 | Knob | VOL | 1 | ○ |
| 511 | RN-MYC-1090A | Knob | TONE,BAL | 2 | ○ |
| 512 | RN-MYB-2789 | Button | EJE | 1 | ○ |
| 513 | RN-MYB-2790 | Button | REW | 1 | ○ |
| 514 | RN-MYB-2791 | Button | FF | 1 | ○ |
| 515 | RN-MCV-1857 | Door | | 1 | |
| 516 | RN-MSI-1100 | Pin | | 1 | |
| 517 | RN-MSC-237B | Spring | | 1 | |
| 518 | RN-MRF-1042 | Heat-sink | | 1 | |
| 519 | RN-MHE-2187 | Holder | For power IC | 1 | |
| 520 | RN-MLC-1273C | Douser | | 1 | |
| 521 | RN-MLC-1265D | Douser | | 1 | |
| 522 | RN-MLF-1336A | Filter | | 1 | |
| 523 | RN-MHE-2087A | Holder | | 1 | |
| 524 | RN-MLC-1270B | Douser | For LCD | 1 | |
| 525 | RN-MHE-1253 | Holder | For LCD | 1 | |
| 526 | RN-MSE-2080 | Spacer | For LCD | 1 | |
| 527 | RN-MHE-2092A | Holder | For LCD | 1 | |
| 528 | RN-MHE-2088 | Holder | Deck front | 1 | |
| 529 | RN-MHE-2253 | Holder | Deck rear | 1 | |
| 530 | RN-MHE-2091A | Holder | For VOL. | 1 | |
| 531 | RN-MIP-1659B | Insulater | | 1 | |
| 532 | RN-MIP-1660 | Insulater | | 1 | |
| ※533 | RN-MPC-2488 | PC board | VOL | 1 | |
| ※534 | RN-MPC-2352A | PC board | Filter | 1 | |
| ※535 | RN-MPM-3500 | PC board | Main | 1 | |
| 601 | RN-MTJ-1N2.6X6 | Screw | 2.6x6mm | 3 | |
| 602 | F6-SBD-2.6X4BS | Screw | 2.6x4mm | 4 | |
| 603 | RN-MET-147 | Special screw | 3x8mm | 1 | |
| 604 | RN-MSN-1 | Nut | 9mm | 1 | |
| 605 | RN-MEN-1059 | Special nut | 6mm | 2 | |
| 607 | RN-MET-253 | Special screw | 3x8mm | 2 | |
| 608 | F6-SBD-3X5BS | Screw | 3x5mm | 8 | |
| 609 | F6-SBD-3X8BS | Screw | 3x8mm | 2 | |
| 610 | F6-SBD-3X4BS | Screw | 3x4mm | 4 | |

NOTE : 1.Specifications subject to change without prior notice.
2.※ marked PC board does not include component parts to be mounted.

# CASSETTE DECK (MDK-78-03Z/S)

| Illus. No. | Stock No. | Parts name | Description | Q'ty | Remark |
|---|---|---|---|---|---|
| MECHANICAL | | | | | |
| 1 | RN-MAS-1146 | Chassis | Main | 1 | |
| 2 | RN-MYT-1363 | Sub-chassis | Head plate | 1 | |
| 3 | RN-MYT-1364 | Sub-chassis | Reel base | 1 | |
| 4 | RN-MUL-1515 | Lever | | 1 | |
| 5 | RN-MUL-1516 | Lever | Change lever | 1 | |
| 6 | RN-MUL-1517 | Lever | EJECT cam lock | 1 | |
| 7 | RN-MYT-1365 | Sub-chassis | Lever bracket | 1 | |
| 8 | RN-MUL-1518 | Lever | Program arm | 1 | |
| 9 | RN-MUL-1519 | Lever | FR arm | 1 | |
| 10 | RN-MHE-2237 | Holder | CM bracket | 1 | |
| 11 | RN-MUF-1033 | Flywheel | R | 1 | |
| 12 | RN-MUF-1034 | Flywheel | L | 1 | |
| 13 | RN-MKR-1229 | Pinchroller mechanism | R | 1 | |
| 14 | RN-MKR-1230 | Pinchroller mechanism | L | 1 | |
| 15 | RN-MKS-1037 | Slip mechanism | Reel spindle | 2 | ○ |
| 19 | RN-MHE-2238 | Holder | Cassette holder | 1 | |
| 20 | RN-MUL-1520 | Lever | EJECT cam | 1 | |
| 21 | RN-MUL-1521 | Lever | EJECT lever | 1 | |
| 22 | RN-MHE-2239 | Holder | Cassette hanger | 1 | |
| 23 | RN-MHE-2240 | Holder | | 1 | |
| 24 | RN-MUL-1522 | Lever | | 1 | |
| 25 | RN-MSP-1106 | Spring | | 1 | |
| 26 | RN-MUL-1523 | Lever | Center plate | 1 | |
| 28 | RN-MUL-1525 | Lever | Change lever(B) | 1 | |
| 29 | RN-MUL-1526 | Lever | FR arm(B) | 1 | |
| 30 | RN-MUL-1527 | Lever | FF lever(A) | 1 | |
| 31 | RN-MUL-1528 | Lever | REW lever(A) | 1 | |
| 32 | RN-MUL-1530 | Lever | Lock arm(A) | 1 | |
| 33 | RN-MSE-2298 | Spacer | Switch arm(A) | 1 | |
| 34 | RN-MUL-1488 | Lever | EJECT button lever | 1 | |
| 35 | RN-MUG-1261 | Gear | | 2 | |
| 37 | RN-MUG-1262 | Gear | Reduction gear(A) | 1 | |
| 38 | RN-MUG-1263 | Gear | Reduction gear(B) | 1 | |
| 39 | RN-MRP-1164 | Roller | Pulley gear | 1 | |
| 40 | RN-MHE-2241 | Holder | Tape guide | 1 | |
| 41 | RN-MUL-1532 | Lever | | 1 | |
| 42 | RN-MUL-1533 | Lever | FF arm | 1 | |
| 43 | RN-MUL-1534 | Lever | Senser arm | 1 | |
| 44 | RN-MUG-1264 | Gear | Selector gear | 1 | |
| 45 | RN-MHE-2242 | Holder | Adjuster arm | 1 | |
| 46 | RN-MUL-1535 | Lever | | 1 | |
| 47 | RN-MUL-1536 | Lever | Gear lock arm | 1 | |
| 48 | RN-MUG-1265 | Gear | | 1 | |
| 49 | RN-MUL-1537 | Lever | TU gear arm | 1 | |
| 50 | RN-MUL-1538 | Lever | | 2 | |
| 51 | RN-MUL-1578 | Lever | Mute arm | 1 | |
| 52 | RN-MUL-1539 | Lever | Tape hooker | 1 | |
| 53 | RN-MRP-1165 | Roller | | 1 | |
| 57 | RN-MST-1174 | Spacer | HP roller(B) | 1 | |
| 58 | RN-MST-1175 | Spacer | FF roller(A) | 1 | |
| 59 | RN-MST-1176 | Spacer | | 1 | |
| 60 | RN-MST-1177 | Spacer | HP roller(A) | 1 | |
| 61 | RN-MST-1186 | Spacer | | 1 | |
| 62 | RN-MST-1179 | Spacer | Program arm roller | 1 | |
| 64 | RN-MSC-1568 | Spring | For FF/REW lever | 2 | |
| 65 | RN-MSC-1569 | Spring | For lock lever(A) | 1 | |
| 66 | RN-MSC-1570 | Spring | For gear lock arm | 1 | |
| 67 | RN-MSC-1571 | Spring | For EJECT lever | 1 | |
| 68 | RN-MSC-1572 | Spring | For EJECT cam | 1 | |
| 69 | RN-MSC-1573 | Spring | For head plate | 1 | |
| 70 | RN-MSC-1574 | Spring | For EJECT cam lock | 1 | |
| 71 | RN-MSC-1575 | Spring | For program arm | 1 | |
| 72 | RN-MSC-1576 | Spring | For adjuster arm(A) | 1 | |
| 73 | RN-MSC-1577 | Spring | For adjuster arm(B) | 1 | |
| 74 | RN-MSC-1578 | Spring | For pinch roller(L) | 1 | |
| 75 | RN-MSC-1579 | Spring | For pinch roller(R) | 1 | |
| 76 | RN-MSC-1580 | Spring | | 1 | |
| 77 | RN-MSC-1581 | Spring | | 1 | |
| 78 | RN-MSC-1582 | Spring | For center plate(B) | 1 | |
| 79 | RN-MSW-1019 | Spring | | 1 | |
| 80 | RN-MSC-1583 | Spring | For earth(R) | 2 | |
| 81 | RN-MSC-1616 | Spring | For mute arm | 1 | |
| 82 | RN-MSC-1584 | Spring | | 2 | |
| ☆83 | RN-EPP-2059 | PC board and parts | | 1 | |
| 84 | RN-EWI-1528 | Lead assembly | | 2 | |
| 85 | RN-MUB-1061 | Belt | Sub(B) | 1 | ○ |
| 86 | RN-MSW-1020 | Spring | | 1 | |
| 87 | RN-MUB-1062 | Belt | Main | 1 | ○ |
| 88 | RN-MSE-2261 | Spacer | CH cushion | 1 | |
| 89 | RN-MSW-1021 | Spring | | 1 | |
| 90 | RN-MST-1180 | Spacer | | 1 | |
| 91 | RN-MCF-1035 | Clamp | | 1 | |
| 93(M901) | RN-EDM-1115 | DC motor | | 1 | ○ |
| ※94 | RN-MPM-3453 | PC board | | 1 | |
| 95 | RN-EWI-1449 | Lead assembly | 60mm(BLK) | 1 | |
| 96 | RN-EWI-1450 | Lead assembly | 60mm(RED) | 1 | |
| 97 | RN-EWI-1451 | Lead assembly | 55mm(YEL) | 1 | |
| 98(A1) | RN-EHM-C42-1066 | Playback head | | 1 | ○ |
| 99(S901) | RN-ESM-1023 | Micro switch | Power switch | 1 | ○ |
| 101(S902) | RN-ESL-1052 | Leaf switch | Mute switch | 1 | ○ |
| 102(S903) | RN-ESS-32-1090 | Slide switch | | 1 | ○ |

| Illus. No. | Stock No. | Parts name | Description | Q'ty | Remark |
|---|---|---|---|---|---|
| 103(C901) | RN-ECK-DB103K-1 | Ceramic | .01 | 1 | |
| 104(J901) | RN-EWJ-5495 | Lead assembly | With 4P connector | 1 | |
| 105 | F6-ER-1.5 | E-type ring | 1.5mm | 4 | |
| 106 | RN-MHJ-1005 | Ring | 1.6x3.2mm | 2 | |
| 107 | F6-ER-2 | E-type ring | 2mm | 4 | |
| 108 | F6-ER-2.5 | E-type ring | 2.5mm | 3 | |
| 111 | RN-MWP-1114 | Washer | | 3 | |
| 112 | RN-MWP-1115 | Washer | | 4 | |
| 113 | RN-MWP-1116 | Washer | | 2 | |
| 114 | RN-MWS-1065 | Washer | | 1 | |
| 115 | RN-MET-1530 | Special screw | 2X5mm | 1 | |
| 116 | RN-MET-1363 | Special screw | 1.7x6mm | 1 | |
| 117 | RN-MET-1505 | Special screw | 2x3mm | 4 | |
| 118 | RN-MET-1364 | Special screw | 2x4mm | 1 | |
| 120 | RN-MET-1507 | Special screw | 2x4mm | 1 | |
| 121 | RN-MET-1358 | Special screw | 2x2.5mm | 2 | |
| 122 | RN-MET-1508 | Special screw | 2x4mm | 1 | |
| 123 | RN-MET-1509 | Special screw | 2x3mm | 1 | |
| 124 | RN-MET-1510 | Special screw | 2x5mm | 2 | |
| 125 | RN-MET-1511 | Special screw | 2x5mm | 2 | |
| 126 | RN-MET-1512 | Special screw | 2x5mm | 1 | |
| 127 | RN-MET-1513 | Special screw | 2x7mm | 2 | |
| 128 | F6-SBD-2.6X3S | Screw | 2.6x3mm | 3 | |

NOTE : 1.Specifications subject to change without prior notice.
2.It takes long time to supply some parts marked ☆ since we do not always have them in store.
In the worst case, we can't supply them for you.
3.※ marked PC board does not include component parts to be mounted.

FUJITSU TEN



8903DE1.15

# SCHEMATIC

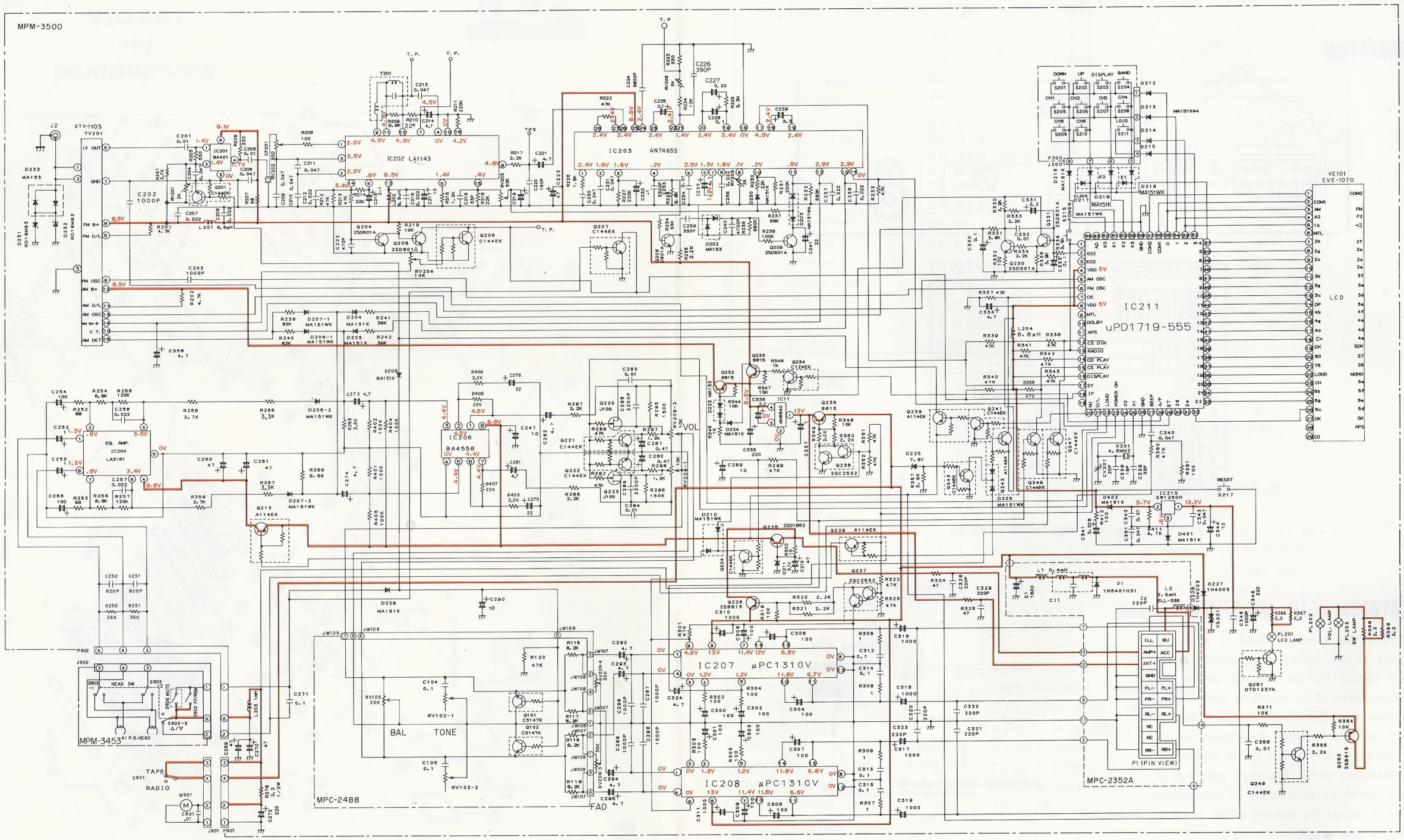


**NOTES:**
1. All capacitance in Micro farad, $P=10^{-12}$
2. All resistance in ohm, $K=10^{3}$
3. All inductance in henry, $m=10^{-3}$, $\mu=10^{-6}$
4. DC voltages against the chassis measured with 10M ohms digital volt meter, power supply set at +13.2 VDC, no signal input.

Fig. 5

# WIRING ON PC BOARD

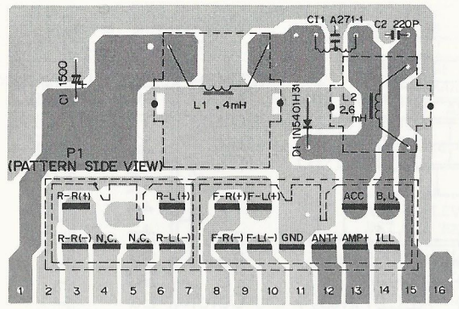


MPC-2352A

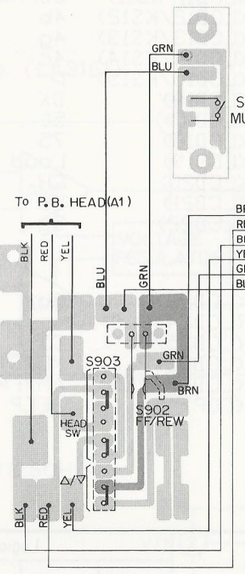


MPM-3453

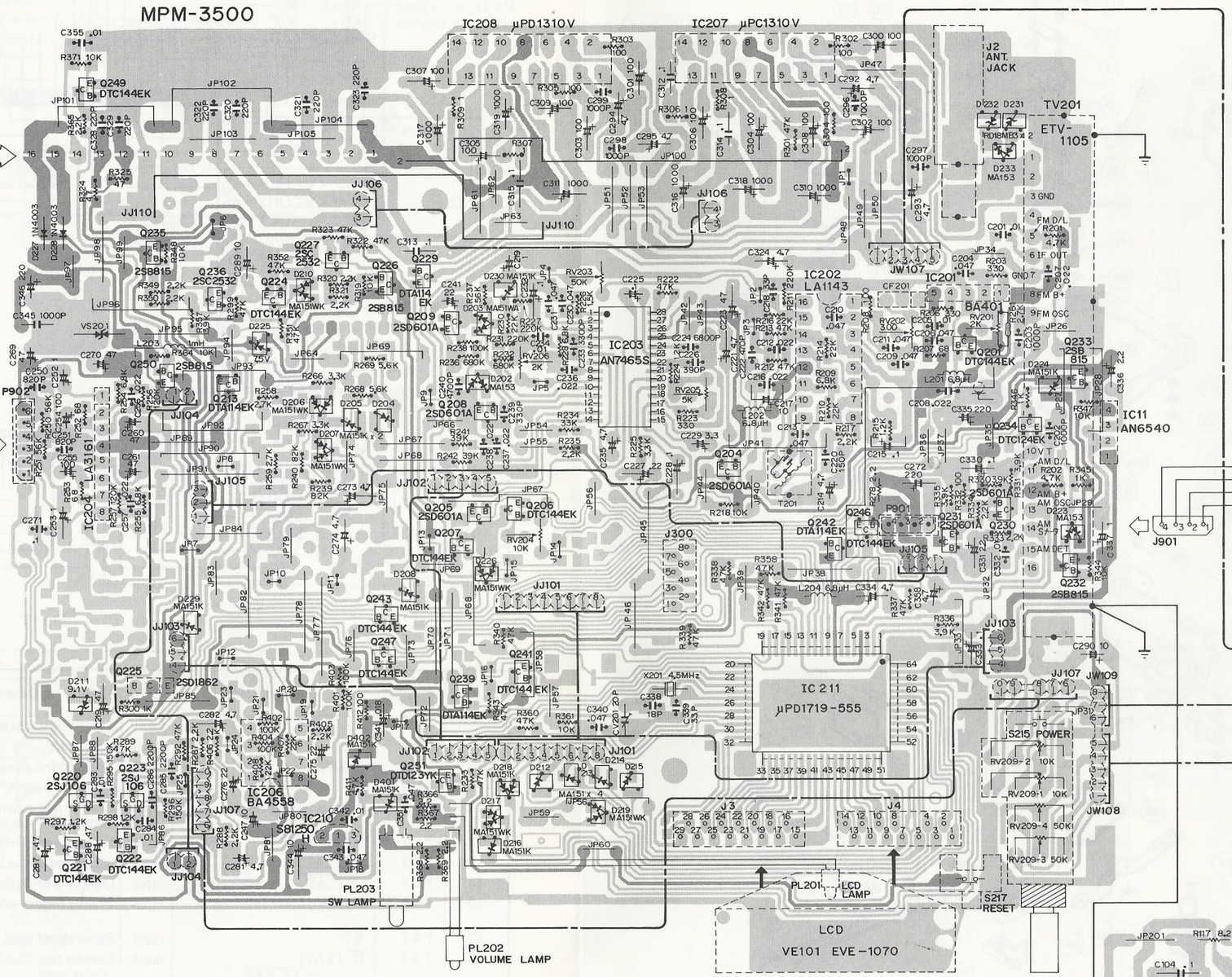


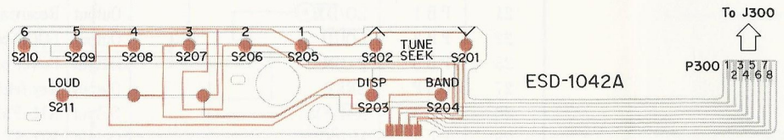


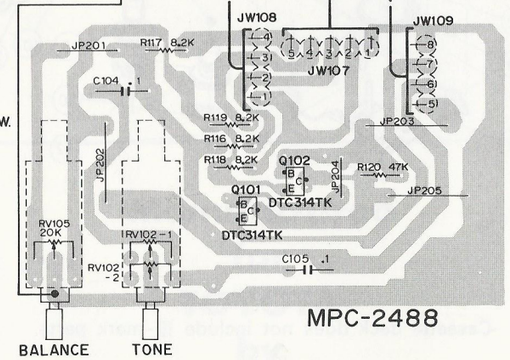


MPC-2488

Fig. 6